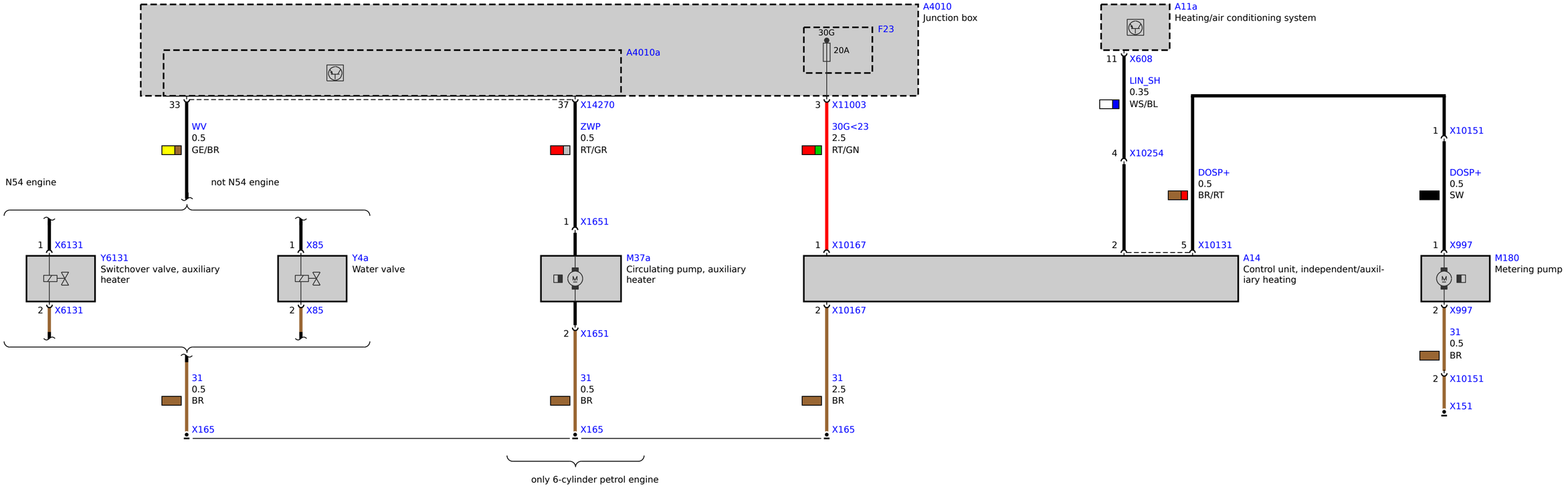
A4010
Junction box
A4010a
30G
20A
F23
A11a
Heating/air conditioning system
33
WV
0.5
GE/BR
37
X14270
ZWP
0.5
RT/GR
3
X11003
30G<23
2.5
RT/GN
11
X608
LIN_SH
0.35
WS/BL
4
X10254
DOSP+
0.5
BR/RT
1
X10151
DOSP+
0.5
SW
N54 engine
not N54 engine
1
X6131
Y6131
Switchover valve, auxiliary heater
2
X6131
1
X85
Y4a
Water valve
2
X85
1
X1651
M37a
Circulating pump, auxiliary heater
2
X1651
1
X10167
2
X10167
2
X10131
A14
Control unit, independent/auxiliary heating
1
X997
M180
Metering pump
2
X997
31
0.5
BR
2
X10151
X151
31
0.5
BR
X165
31
0.5
BR
X165
31
2.5
BR
X165
only 6-cylinder petrol engine