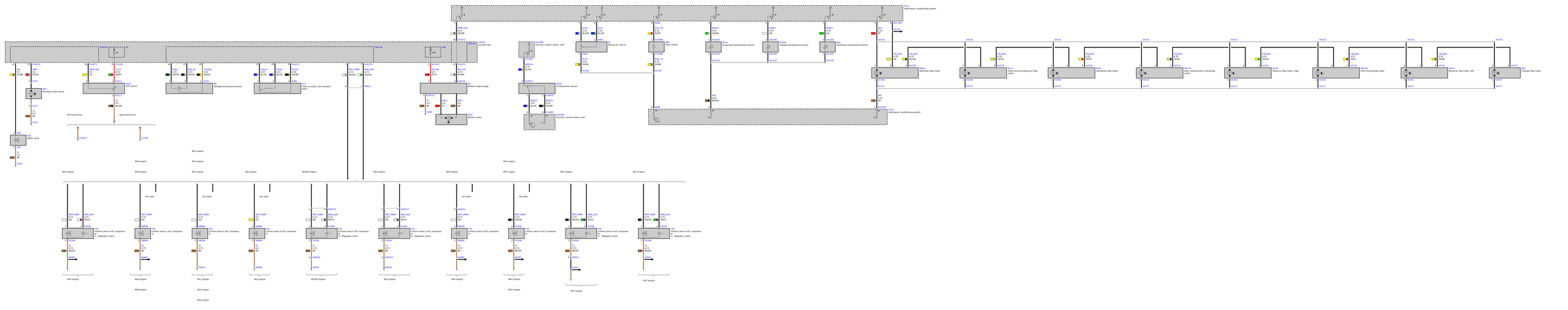
A114 Heating/air conditioning system
A4010 Junction box
A4010a
A4010b
K1 Mixing air control
B6 Solar sensor
B14a+ Evaporator temperature sensor
B14b+ Footwell temperature sensor
B41 Ventilation temperature sensor
X11142
X11136
X11138
X11139
X11140
X11141
X11143
X11144
X11145
X11146
X11147
X11148
X11149
X11150
X11151
X11152
X11153
X11154
X11155
X11156
X11157
X11158
X11159
X11160
X11161
X11162
X11163
X11164
X11165
X11166
X11167
X11168
X11169
X11170
X11171
X11172
X11173
X11174
X11175
X11176
X11177
X11178
X11179
X11180
X11181
X11182