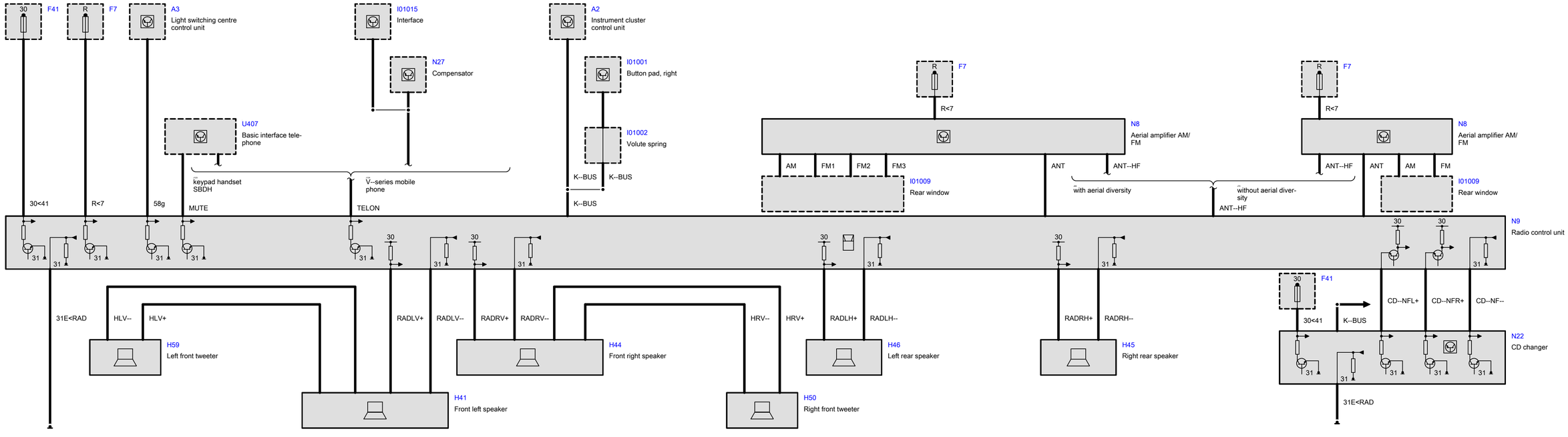
30
F41
R
F7
A3
Light switching centre control unit
I01015
Interface
N27
Compensator
A2
Instrument cluster control unit
I01001
Button pad, right
I01002
Volute spring
U407
Basic interface telephone
"keypad handset SBDH
"V--series mobile phone
K--BUS
K--BUS
K--BUS
30<41
R<7
58g
MUTE
TELON
31
30
R<7
N8
Aerial amplifier AM/FM
AM
FM1
FM2
FM3
I01009
Rear window
ANT
ANT--HF
"with aerial diversity
"without aerial diversity
ANT--HF
FM
N9
Radio control unit
31E<RAD
HLV--
HLV+
H59
Left front tweeter
RADLV+
RADLV--
RADRV+
RADRV--
H44
Front right speaker
H41
Front left speaker
HRV--
HRV+
H50
Right front tweeter
RADLH+
RADLH--
H46
Left rear speaker
RADRH+
RADRH--
H45
Right rear speaker
CD--NFL+
CD--NFR+
CD--NF--
K--BUS
N22
CD changer

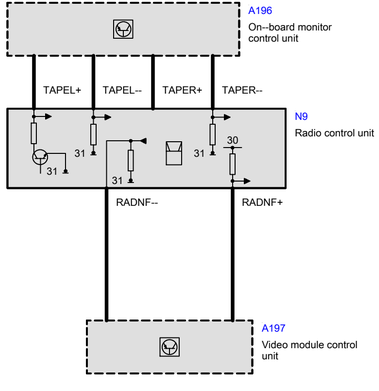
A196
On--board monitor control unit
TAPEL+
TAPEL--
TAPER+
TAPER--
N9
Radio control unit
31
30
RADNF--
RADNF+
A197
Video module control unit