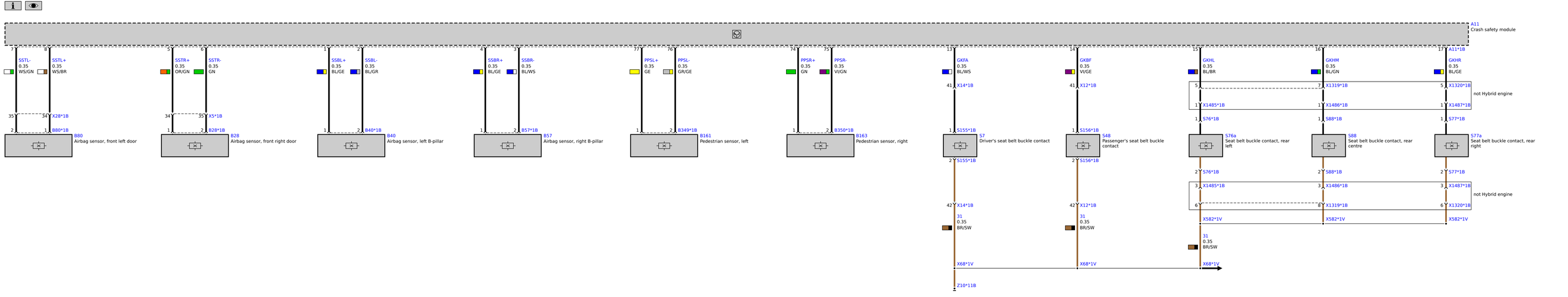
A11
Crash safety module
SSTL-
0.35
WS/GN
SSTL+
0.35
WS/BR
X28*1B
B80*1B
B80
Airbag sensor, front left door
SSTR+
0.35
OR/GN
SSTR-
0.35
GN
X5*1B
B28*1B
B28
Airbag sensor, front right door
SSBL+
0.35
BL/GE
SSBL-
0.35
BL/GR
B40*1B
B40
Airbag sensor, left B-pillar
SSBR+
0.35
BL/GE
SSBR-
0.35
BL/WS
B57*1B
B57
Airbag sensor, right B-pillar
PPSL+
0.35
GE
PPSL-
0.35
GR/GE
B349*1B
B161
Pedestrian sensor, left
PPSR+
0.35
GN
PPSR-
0.35
VI/GN
B350*1B
B163
Pedestrian sensor, right
GKFA
0.35
BL/WS
X14*1B
S155*1B
S7
Driver's seat belt buckle contact
S155*1B
X14*1B
31
0.35
BR/SW
X68*1V
Z10*11B
GKBF
0.35
VI/GE
X12*1B
S156*1B
S48
Passenger's seat belt buckle contact
S156*1B
X12*1B
31
0.35
BR/SW
X68*1V
GKHL
0.35
BL/BR
X1485*1B
S76*1B
S76a
Seat belt buckle contact, rear left
S76*1B
X1485*1B
X582*1V
31
0.35
BR/SW
X68*1V
GKHM
0.35
BL/GN
X1319*1B
X1486*1B
S88*1B
S88
Seat belt buckle contact, rear centre
S88*1B
X1486*1B
X1319*1B
X582*1V
GKHR
0.35
BL/GE
A11*1B
X1320*1B
X1487*1B
S77*1B
S77a
Seat belt buckle contact, rear right
S77*1B
X1487*1B
X1320*1B
X582*1V
not Hybrid engine
not Hybrid engine