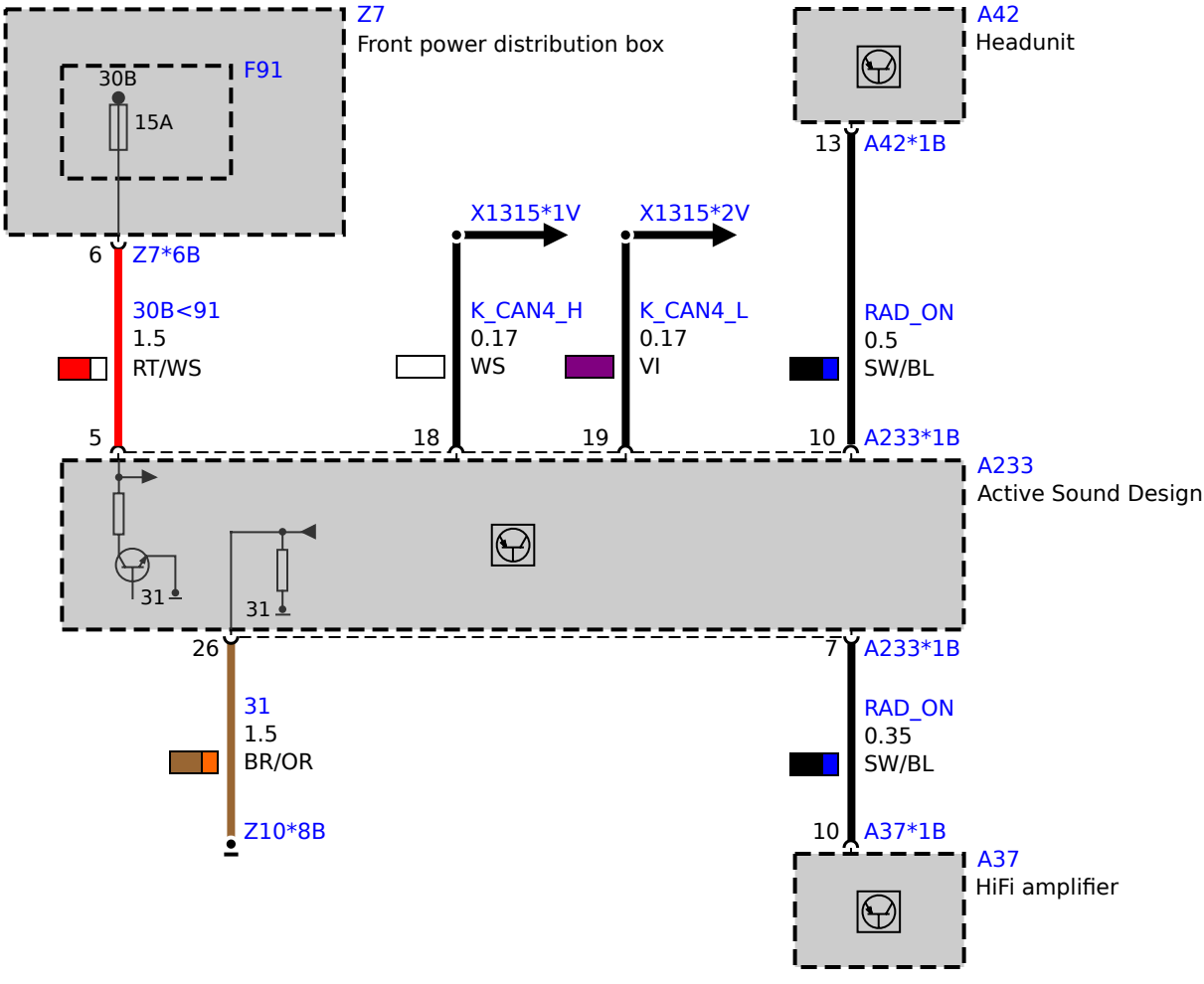
Z7
Front power distribution box
F91
30B
15A
6
Z7*6B
30B<91
1.5
RT/WS
5
A42
Headunit
13
A42*1B
X1315*1V
X1315*2V
K_CAN4_H
0.17
WS
18
K_CAN4_L
0.17
VI
19
RAD_ON
0.5
SW/BL
10
A233*1B
A233
Active Sound Design
31
31
26
31
1.5
BR/OR
Z10*8B
7
A233*1B
RAD_ON
0.35
SW/BL
10
A37*1B
A37
HiFi amplifier